Get Into 3D Printing Without It Being A Total Waste of Plastic

Book 1

By Duncan Weir

Get Into 3D Printing Without It Being A Total Waste of Plastic

Book 1

By

Duncan Weir

twofplastic@gmail.com

CONTENTS

Preface

I knew nothing about 3D printing, all I knew was that I wanted to learn about it, I wanted to see if this science and it is a science. Would allow me to learn new things, and broaden my horizons, as it were. I bought a 3D printer before I realised how varied and at times complicated this hobby is. I work in IT, so new things are not alien to me. But I soon realised that there are many facets to 3D printing, of which, I knew very little.

So, what was I going to do? Would I try get it to work, get bored trying, then sling the damn thing in the garage? I trawled the 3D printing forums, looking for the answers to the many questions I had?

I decided to write myself an eBook. As I have already stated, I work in IT, so producing documents that explain difficult concepts in an easy to understand way, should come easy, right? I mean, 10,000 words should do it. Shouldn't it? I already had the printer all I needed to do was get the information, test in on my own printer and write up what I found? Something I could turn to if I got stuck.

That was back at the end of May this year (2017) I have now written 60,000 words. I own three printers, a desktop Cartesian style, a Delta, and aFlsun cube, which is my large volume printer, for the big prints. Everything I have written about in my books has been tested on one of the above printers. I have first-hand experience of every emotion one can have when it comes to owning one of these printers. I hate to think how many hours I have spent sorting out one issue after another. But, I would do it all again in a heartbeat.

3D printing is the most fun you can have whilst staying on the right side of the law. It has shown me a side of myself I never realised I had. It has taught me a better grasp of math, an understanding of Geometry. 3D CAD design, utilising my imagination, logical fault diagnostics. 2D drawing techniques. Creating something I found floating around in my head one morning whilst in the shower. To a fully functional object that filled a need I had with a business idea.

60,000 words is a lot of book. So, I decided to publish them in four separate books. I thought it unfair to make someone with a desktop-style printer, pay extra for the part explaining the calibration steps for a Delta style printer. I have tried to aim the books to anyone who has a beginner to intermediate level of knowledge. I have made sure to break down the concepts of this science so that it is easy to understand. I have also included plenty of pictures that show what I am doing.

The most infuriating part of owning a 3D printer must be calibrating it. But if you take your time and follow my advice in book two of this series, where I calibrate a desktop Cartesian style printer. And book three, where I turn my attention to the Delta style printer. You will find this important step, quite painless and rather easy. In fact, I can set up my Delta printer, with no bed levelling magic to print flawlessly, right across the build plate in less than 30 minutes. This was my main aim whilst writing these books. Explain the concepts in an easy to understand way, and get results quickly and easily.

I think 3D printing is one of the most empowering things to come out in the past 25 years. It has the power to revolutionise how we go about our daily lives. How we can help others, and how we can as a group, help those around us. It is all too easy to buy a 3D printer and end up printing stuff we find on sites like "Thingiverse" and while there is nothing wrong with doing this. It does become boring quite quickly. Better that we learn a new skill or two so that we can create for ourselves. Or get together with like-minded people and focus our power on helping the community around us.

You are looking at book one in the series of four. This first book in the series explains a little history of 3D printing. What you want a 3D printer to do if you decide to buy one. The different types of 3D printing are explained (FDM, FFF, DUP etc) Different types of filament you can use to make your objects. Whether to buy a ready-made printer or build from a kit. How to choose your ideal printer, and how to buy cheaper from China and stay safe.

Owning a 3D printer is an opportunity to find your creativity. Your

imagination will do the rest. Above all, your sense of accomplishment and achievement will soar, as will your learning, not only about 3D printing but about yourself too - Duncan Weir – Author

Acknowledgments

To all those people who have unknowingly helped me in my quest to tame this beast. To those who have been here already. Who made it better or easier for those like me. To pick up 3D printing as a usable, enjoyable hobby. To the RepRap community who are always there to offer great advice and help to the lost souls who wander by. To offer them the hand of friendship and assistance. For all their work. Which usually goes on without acknowledgment or any thanks at all.

To the creators and development team behind Marlin, for their undivided time and effort to bring about the changes we so often crave and mostly done for free or just for the simple love of it.

Thanks also to you, “potential reader” If you are thinking about buying this book, that means you are thinking of getting into this fascinating hobby. Without you, 3D printing ceases to need improvement from the companies selling the machines and the filament and other hardware. The innovation will stop and so will it’s future and sense of fun.

To all you kindly folks, I thank you from the bottom of my heart.

What is 3D printing

3D printing is a process in which objects are made by fusing, or depositing materials, such as plastics, metal, ceramics, and powders, to produce a 3D object. This process is predominantly used in the automotive and aviation fields, but is also used for designing jewellery, medical institutions, do-it-yourself projects, and many other manufacturing processes.

3D printers work much like inkjet printers. Instead of ink, 3D printers deposit the desired material, usually PLA filament, in successive layers to create a physical object from a digital file. This file is either sent straight from a computer via a cable, or via an SD card. The SD card is inserted into a card slot found on the printer itself, then the file is read by the 3D printer.

In terms of 3D printing, this is a technology that can enhance, help, and save you time, and quite a bit of effort. Aside from this, it has the potential to also teach you a new skill or two. It may even awaken some talent that you didn't realise you already had. Here, I am talking about the design aspect of the process. Even if you don't want to get your hands dirty with modelling in 3D(by the way, it is easier than you may think), you still go through a design process. You may have a moment when you look at something and realise it could have been made better. Or, that something you use every day could have more functionality. Even if you don't want to model the part required, you can just as easily ask online, in a 3D printing forum. Here, you will find an abundance of help. Someone is bound to offer to make the part for you.

The great part about this technology is there are people who are very good at designing all kinds of objects. All they need is a picture to work with. Even a shared idea is good enough to get the ball rolling. In no time, you will have your project emailed to you, ready to be loaded into your favourite slicing application, and ready for you to print.

Even if they charge a little for their time. You get to print the final part.

You get to see the part take shape, and you get to print it in the colour you think goes best.

The Inner Workings

There are many ways in which you can go from designer to manufacturer. Understanding the process is the first part of this. Here, we will explore what 3D printing is and how it works. We don't need to do this to a degree level, but a healthy understanding of the process is always a good place to start. Because you will be using filament on a reel, called PLA, and occasionally ABS (more durable and heat resistant), we will stick to this method of 3D printing, often called "additive manufacturing" (AM) There are two main ways of printing this way, which we will come to later in the book. I will leave it to you to go deeper into the other 3D printing sciences, should you wish to. While it is very interesting, I wish only to push your boat away from the bank. If you become interested in the other 3D printing methodologies, that's great.

3D printing, or additive manufacturing, refers to processes used to create a three-dimensional object. Layers of material are formed under computer control, via a file and sent to the printer itself to create the object in question. Objects can be of almost any shape or geometry and are produced using digital model data from a 3D model or another electronic data source such as an additive manufacturing file (AMF).

The futurologist Jeremy Rifkin claimed that 3D printing signalled the beginning of a third industrial revolution, succeeding the production line assembly that dominated manufacturing starting in the late 19th century.

The term "3D printing" originally referred to a process that deposits a binder material onto a powder bed with inkjet printer heads, layer by layer. More recently, the term is being used in more popular language, to encompass a wider variety of additive manufacturing techniques.

We go a little deeper

3D printing starts with a digital file made from a computer-aided design software package (more on that later). Once a design is completed, it must then be exported as a Standard Tessellation Language file. STereoLithography (STL) is a file format native to the stereolithography CAD software created by 3D systems. STL is also known as "Standard Triangle Language" and "Standard Tessellation Language. Don't worry about the "computer talk." All I want to show you are the inner workings of the subject. The only thing you need to understand is that most of the time, you will be working with .stl files. These are what you will be saving your created objects as.

This file format is supported by many other software packages. It is widely used for computer-aided manufacturing. STL files describe only the surface shape of a three-dimensional object. Another way to look at this, is that the STL files are only interested in the outside of the model. There is no information about colour, texture or other computer-aided design attributes. Imagine a television: an STL file would only show you what the telly was from the outside. It would not show you the inner workings, such as the tube, all the wiring, and the computer boards inside the television.

To get the .stl file to be printed by the 3D printer, it needs to be sliced into hundreds or thousands of flat 2D layers. It's these layers the physical 3D printer uses to produce the model or object you created. All design files, no matter what printing technology you are using, use this 2D layer approach to finally print your design. This application is known as a "slicer." Layer thickness, the size of each individual layer of the sliced design, is then determined partly by technology x material, x desired resolution, plus, a splash of you, and the time you have, to allow it to be printed.

Thicker layers equal faster builds. Thinner layers equal finer resolution or less visible layer lines, so your object looks better without the need to

sand stuff down; therefore, it is less intensive post-processing. After a part is sliced, it is oriented for build.

Orientation: how does that sit?

Orientation refers to how, and at which direction, your part is placed on the 3D printing build platform. For example, a part may be leaning at an angle, lying flat, or standing vertically. Orientation decides the outcome of surfaces and details on a wall or outside of the 3D printed part. Imagine pressing down on a freshly laid brick wall; the cement would squish out. Because 3D printing lays one 2-D layer at a time, the individual lines can be seen, like the cement in our freshly ruined wall. Downward facing surfaces usually reveal more layer lines. Certain build orientations are better for curved or square features, while delicate features require special consideration.

Supports

Designs with higher instances of warp (or material deformation) must account for large flat surfaces during build processing. It is critical to consider these factors, because how a part is made, and laid on the printing surface, determines where supports are required and added. Your design may lean over too far one way or the other, and this could lead to it falling or just not being able to handle the plastic material continuously added to the object, as the object is printed.

Imagine that your printer was building a model of a bridge; the two vertical support towers would be easy to print. But when the model gained a little height, and the printer tried to lay the first layers of the road section between the vertical supports. the strand of plastic would be attached at one end and droop to the floor as it continued its pass. Here is a great illustration of something needing a support.

Here you can see the letter F (figure 1). There are areas that will require support because as the hot end deposits material where the parts of the object are affectively in “mid-air” there is nothing to stop the plastic from dropping down and ruining the finished print.

In this case, you would tell your slicer software to add support to those areas, as seen below.

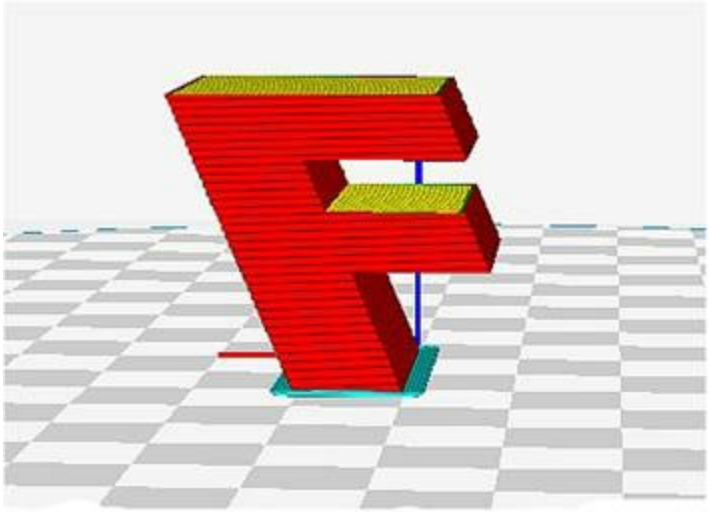

Figure 1

Here is the same object (figure 2), but this time, support has been added. The support is coloured blue and is laid down in the same way as the rest of the object; it's still the same colour, it's just highlighted differently so you can see what the support structure is going to look like. Support material breaks off easily from the rest of the object. There are settings that allow this to happen, of which I will show you later, and how to set this up.

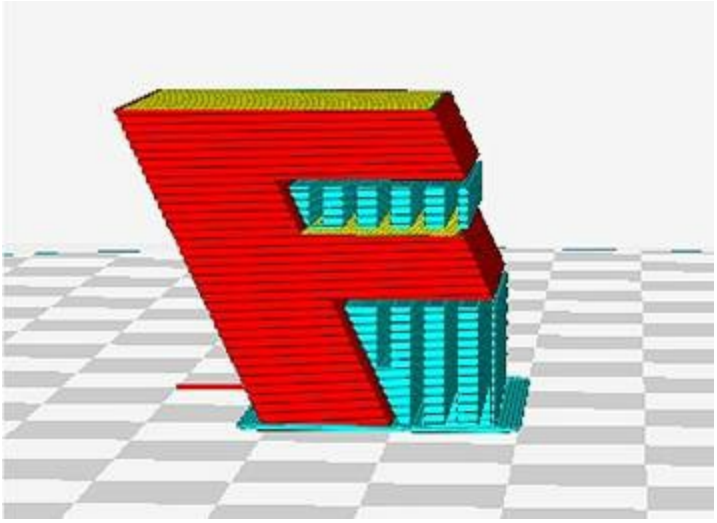

Figure 2

What have we learned?

- 3D printing is known as additive manufacturing (AM).
- The printing process uses filament on a reel, using PLA and ABS plastics.
- Objects can be of almost any shape or geometry.
- 3D printing starts with a digital file.
- STL is a file format native to the stereolithography CAD software.
- Most of your projects will be files that end with .stl.
- STL files need to go through a "slicer" application before they can be used by a 3D printer.
- Orientation refers to how, and at which direction, your part is placed on the 3D printing build platform.
- Some designs, and the way they are made, require "supports" as they

are being printed. Think of a bridge as it’s being printed.

History of 3D Printing

In 1984, Charles Hull invented stereolithography. He later went on to be the founder of a company called 3D Systems. Stereolithography is the process that enables a tangible something to be created from a digital file held on a computer into something to hold, or use.

In the **1990**s, the first stereolithographic machine was made by 3D Systems. This machine was a far cry from the PLA extruding designs of today. This machine built things using a UV laser, which solidified a photopolymer and looked a bit like treacle. Using this process, it then made a 3-dimensional model, layer by layer. While it wasn't perfect, it certainly laid the first steps of the path we walk today.

In 1999, the first lab-grown organ was implanted in humans. A patient underwent a urinary bladder surgery using a 3-D synthetic layer coated with their own cells. The technology, developed by scientists, opened the door to developing other ways for creating organs, including printing them. Also, because they were made with the patient's own cells from their own body, there was insignificant risk of rejection.

In 2002, the world's first miniature functional kidney that could filter blood and produce diluted urine in an animal was created.

In 2005, Dr. Adrian Bowyer at the University if Bath founded RepRap. This was an open-source initiative to build a 3D printer that could print most of its own parts! Think about that for a moment. This was the stuff of dreams: a printer that could print its own parts could potentially mend itself, or at least print out the non-working part or upgrade.

The end goal of the project was to put into the public domain cheap 3D printers available to the masses. As we all know, when anything is put into the public domain, other people's ideas are added to the initial embryo of the idea. These ideas get refined and the product gets better. It also becomes easier to use, thus more and more people can use it, and the cheaper it gets.

In 2006, SLS, also known as "Selective Laser Sintering," was introduced. This process uses a laser to fuse materials into 3D products. This breakthrough allowed the start of mass production and customisation of industrial parts. It also saw the development of certain prostheses to help replace missing body parts lost through trauma, disease, or congenital abnormalities.

In 2008, there was the first self-replicating printer, called Darwin (great name). The idea, first launched in 2005 with RepRap, finally made a way of replicating a printer by printing its own parts, which could then be given to other people to build one themselves.

Also in **2008**, the first person walked on a 3D printed prosthetic leg. What this process did was to make the whole leg, knee, foot, socket, etc, all in one. There was no assembly required. This is a major plus point with 3D printing. If you need to make a joint, that joint could be built straight into the printed part. This allows the finished product to be ready for use straight from the printer bed. No extra parts are required, no fitting of hinges, or joints is required.

2009 saw the first DIY kits for 3D printers. MakerBot Industries started selling DIY kits that allowed buyers to make their own 3D printers. This was what I would suggest you do: buy a kit and make it yourself. It is not difficult, and it is a fantastic way to learn what a 3D printer does, and more importantly, how it does it.

Another milestone in 2009 saw the first 3D printed blood vessel.

In 2010, engineers at the University of Southampton design and fly the world's first completely 3D-printed aircraft. This unmanned beast was built in seven days for a budget of £5,000.

And what of 2011? Well that year, saw the first totally 3D-built car. It was called "Urbee." Obviously, the body of the car was the only part 3D printed. Let's not run before we can walk, or drive, for that matter.

Another **2011** milestone: Cornell University began to build a 3D food printer. At first sight, it would seem slightly trivial and unrelated, but NASA was now researching how astronauts could 3D print food whilst in

space.

In 2012, the first 3D-printed prosthetic jaw was implanted. Doctors and engineers in the Netherlands used a 3D printer made by LayerWise to print a customized prosthetic lower jaw, which was implanted into an 83-year-old woman suffering from an untreatable bone infection.

In 2014, Local Motors debuted "Strati," a functioning vehicle that was entirely (except for the powertrain) 3D-printed using ABS plastic and carbon fibre.

In May **2015**, Airbus announced that its new Airbus A350 XWB included over 1000 components manufactured by 3D printing.

Finally, in the last several years, 3D printing has been intensively used in the cultural heritage field for preservation and restoration. Many museums have purchased 3D printers to recreate missing pieces of their relics. The British Museum has started using their 3D printers to create museum souvenirs that are available for sale in the museum shops.

Other military history museums have gone further to sell digital models of their artefacts, in 3D-printing friendly file formats. Anyone with a 3D printer can 3D-print these at home.

The future of 3D printing

The future of 3D printing is a bright one. There are many new concepts coming in the very near future. Soon, we will see filaments coming out with many new properties. Filaments will be able to withstand tougher environments. There will also be a push to make all filament bio-degradable and safer to use. The main push to get this into homes will be the diversification and ease of use from the upcoming filament recipes. Mixing plastics and metal is obviously the next step. Then there's the rubbish! We create a massive amount of throw away plastic rubbish. Wouldn't it be great if we could take that rubbish and give it a new use, as usable filament?

The delivery system, that of the machines we use, to create the objects that we make, will also see a steady change. They need to get more user-friendly. They are still a little bit too far out there (the toys of geeks!). Very soon, we will see a more simplistic approach to 3D printing, but also allow those who wish to, to tinker to their hearts content. Fully enclosed, easy-to-set-up and easy-to-operate printers are going to be available at great prices. Thus, allowing people of all ages to play their part in this new industrial revolution.

Where it goes, is all part of this amazing science. One thing is for sure, you are standing on the cusp of something amazing. Where it goes for you is limited only by your imagination. As things change, and the availability of the printers themselves becomes easier, the supplies they use and the technological advancements of the filaments that we can use will only get better. So, here's to the future—a bright and imaginative one.

What can it do, and what can I use it for?

This is perhaps the most difficult aspect of any innovative technology and certainly one that covers 3D printing. The question usually goes along the lines of "I want one, but what can I use it for?"

I have always loved the latest "tech kit"—that feeling you get when you hear about anew idea or anew thing. The possibility of this yet unheard-of facet of technology allows you to do something quicker or better. Perhaps it is something so new, and it does it so well, it will change your life beyond belief. Chances are, you were getting along just fine before you knew it was available. Now though, you need it. "At last, this thing will allow me to do something that I couldn't do before!"

It's the same with 3D printers. The idea is great; in fact, it's mind-blowing. The thought that you can take some plastic and melt it in such a way that you can turn it into something different—think of the possibilities? Think how that might change your life!?

And there, ladies and gentlemen, is the big problem: finding that something, that gap, where by having a 3D printer would fill that need. So, what can you do with it? What are you going to make? What wonders will it create in front of your very eyes?

I must tell you, I really don't know. If you like to dabble with making things, if you like to design stuff, that bridges a gap in your life. 3D printing can, and will be, a great asset to you.

Let's look at some of the things you could make, should you decide to purchase a 3D printer.

First, if flying model drones is your bag, then you really need to get a 3D printer. There are thousands of designs and web pages detailing how to construct the perfect drone. Using nothing more than a 3D printer and a Raspberry Pi computer board, you can get a good drone design underway. Also, should you think that you could do better, why not drag

the STL files into your favourite 3D CAD package. You can then change the design to better suit your own needs. You could also share your designs with others.

There are countless household items that you could make, from T-Rex showerheads to lampshades. Ikea does a line of 3D printed lampshades that might inspire you. What about a funky pen holder or electric socket covers, elaborately designed by you.

There are loads of vases, flowerpots, wall hangers, kitchen knick-knacks, laundry items, car drinks holders, and a plethora of other time-saving ideas that I can't for the life of me think of right now, but I bet you can. Other items include a working padlock with key (yes, really) and all printed from plastic. If you have children and they have a favourite cartoon character, you can bet your bottom dollar someone has a file to print it in a range of colours and sizes. I bet someone has a file for a "bottom dollar" too. If not, why not design your own?

Say, for instance, you have an expensive pair of headphones. We all know those cost an arm and a leg. Although you paid a lot of money for them, inevitably, they have weak spots. Now, let's say you sit on them one day! Hang on, I didn't sit on them; some other idiot did! Anyway, you realise they are broken at the point where the thingy attaches to the gimbal. No problem! Just look around on the internet, because there is one thing for sure: if your headphones broke, someone else's broke before yours did, and someone has designed a part to fix it. The power of 3D printing strikes again.

My point to all this is to show you that this 3D printing lark is only limited by your imagination. If it doesn't exist yet, then design and build it yourself. There is an immense feeling of contentment and satisfaction when you get through the whole design process. Now there, in your hands, is the part that first started life in your head, as a thought, an idea that came to you whilst you were in the shower perhaps. And imagine the feeling of elation when someone asks you where you got that thing from, because they were looking for something just like that themselves. You'll still have the file, so why not offer to print them one too?

There are lots of sites out there that will help you with your ideas. I will list a few of them here. Some of these sites require you to sign up, to use them, but it's worth the time in the long run. These sites allow you to browse other people's designs. There are as many things to print as there are stars in the sky (well almost); just take the name and Google it to get the URL.

Site name	Type of site	Cost to use
Thingiverse	Repository	Free
Grabcad	Repository	Free
Sketchfab	Repository	Free
Autodesk 123d	Repository	Free
CGTrader	Marketplace	Free, Paid
My Mini Factory	Marketplace	Free
Yeggi	Search Engine	Free, Paid
Pinshape	Marketplace	Free, Paid
Dremel Idea Builder	Repository	Free
YouMagine	Repository	Free

These are just some of the sites, and there are many more, that I use to get ideas or to check to see if anyone has already done the challenging work of "the conception" of an idea. These sites are an invaluable source of ideas and knowledge.

I will be showing you later in my series of books, how to take a design that you find online and change it in to something that is more to your liking. Once you get the hang of the design process, you will be surprised by how eagerly you will be sitting down with a ruler in hand, making your design. I promise you, that in a short while, you will be making more things than I could ever think of here.

Another reason to purchase a 3D printer is to copy something you have seen in the shops or online. This is not "copyright infringement" if it's not a like-for-like copy or a blatant rip-off. Even if it is a rip-off, you are safe to design anything you like, as long as you don't try to sell it as the original. But let's take an idea of a "home automation device." Those online boxes that you ask questions, or tell it to turn down the lights in

the living room, and all by just using your voice?

Well, this type of technology is open to all. Company's like Google and Amazon allow anyone to take their APIs (application programming interfaces) and make them work with their own systems. So, you could design a case that holds a Raspberry Pi or an Adrianoboard (micro PC). Using the steps found on any modding website, like Hackaday, or Buzzfeed, create your very own home automation unit. Not only that, but your device will then be able to work with the "home automation kits" like NEST and Philips Hue.

Maybe you already have some ideas of things that you could make. Perhaps you have an idea just screaming to get out and make its way over to your printer. There is one point worth mentioning here. The printers that this book talks about have what we call a "build space." This is the amount of space that is available to build on or within. For instance, my first printer had a build space of 270 X 210 X 190, so that means 270mm long 210mm wide and 190mm high. My second printer has a build space of 250mm x 250mm by 400mm (I don't mean to brag!).

When you decide to buy a 3D printer, take into account the size of the things you think you might want to build and create. If you are into tall vases, and like them at least half a meter high, you will need a printer with the capacity to build something 500mm tall.

The question you really need to ask yourself, is this: *What do I want to build, and why? Then, ask yourself, If I could build it, how would I do it?*

Types of 3D printers

We will now go over the distinct types of 3D printers. Obviously, we will only be talking about our old friend, fused deposition modelling, also known as FDM, but a little information about the other types won't go amiss. FDM is the technology we are most interested in because of its availability and lower cost. To go too deeply into the other types will waste valuable pages. Getting you up to speed with everything, and to get you printing at this stage, is my main concern.

In FDM, material (in this case PLA or ABS type filament) is deposited in layers to create a 3D printed object. Whilst the printing process is going on, the plastic filament is fed through a hot extruder (hot end). Because of the heat, the plastic gets soft enough that it can be precisely placed by the print head. The melted filament is then deposited layer by layer. The molten plastic is pushed through the hole in the extruder. The object is built up, until a finished representation of the initial 3D CAD design, is left. (Figure 3)

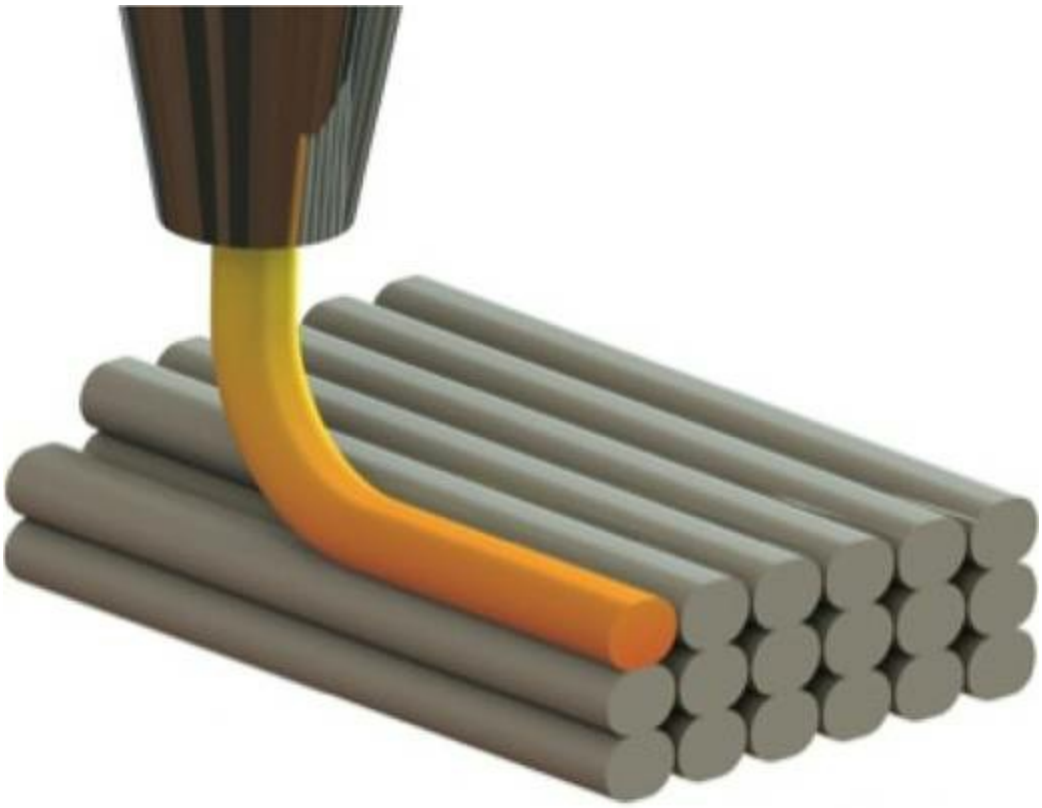

Figure 3 (courtesy of Zureks)

Types of Filament Pt1

There are many types of plastic that you can use to build your objects. Some of the better-known ones are as follows.

- PLA – A filament that is an eco-friendly, biodegradable material, made from corn starch.
- ABS - This is a common plastic used in a lot of casings and consumer products.
- NYLON – A very versatile printing material and very strong.
- PET-G – Very strong and bends like a gymnast.

Usually, the filament comes in 1KG rolls; the diameter is 1.75mm, which is around 330 meters. That's an awful lot of projects. Filament also comes in other sizes, 3mm being another well-known size.

The technology behind FDM was invented in the 1980s by Scott Crump, co-founder and chairman of Stratasys Ltd., a leading manufacturer of 3D printers. Other 3D printing vendors have since used similar technologies, although under different names. For instance, MakerBot was founded on a nearly identical technology known as fused filament fabrication (FFF). This obviously had an impact because Stratasys later bought out MakerBot.

This is how the magic happens within an FDM: The extrusion nozzle moves over the build platform horizontally and vertically (the X and Y axis), thus drawing or casting a layer of the object onto the platform. This thin layer of plastic cools and hardens, immediately binding to the layer beneath it. Once a layer is completed, the base is lowered or the extrusion nozzle moves up (the Z axis). This usually happens by about .2 of a millimetre; this then makes room for the next layer of plastic.

The rate of build, or the time it takes an object to be printed from start to finish, depends on how complex the object is. It also slows down the process if the object is large. FDM printing is one of the slowest methods of 3D printing. If an object has difficult-to-print angles and overhangs,

you can select to print scaffolding, otherwise known as “supports.” This scaffolding helps to prop up the overhangs. This also stops your printed object from falling over or not turning out the way you planned. Once printing has completed, the scaffolding can be taken away by the carful use of a sharp knife.

Cartesian 3D printers

are named after the dimensional coordinate system of the X, Y, and Zaxes, which is used to determine where and how to move in three dimensions. (Figure 4)

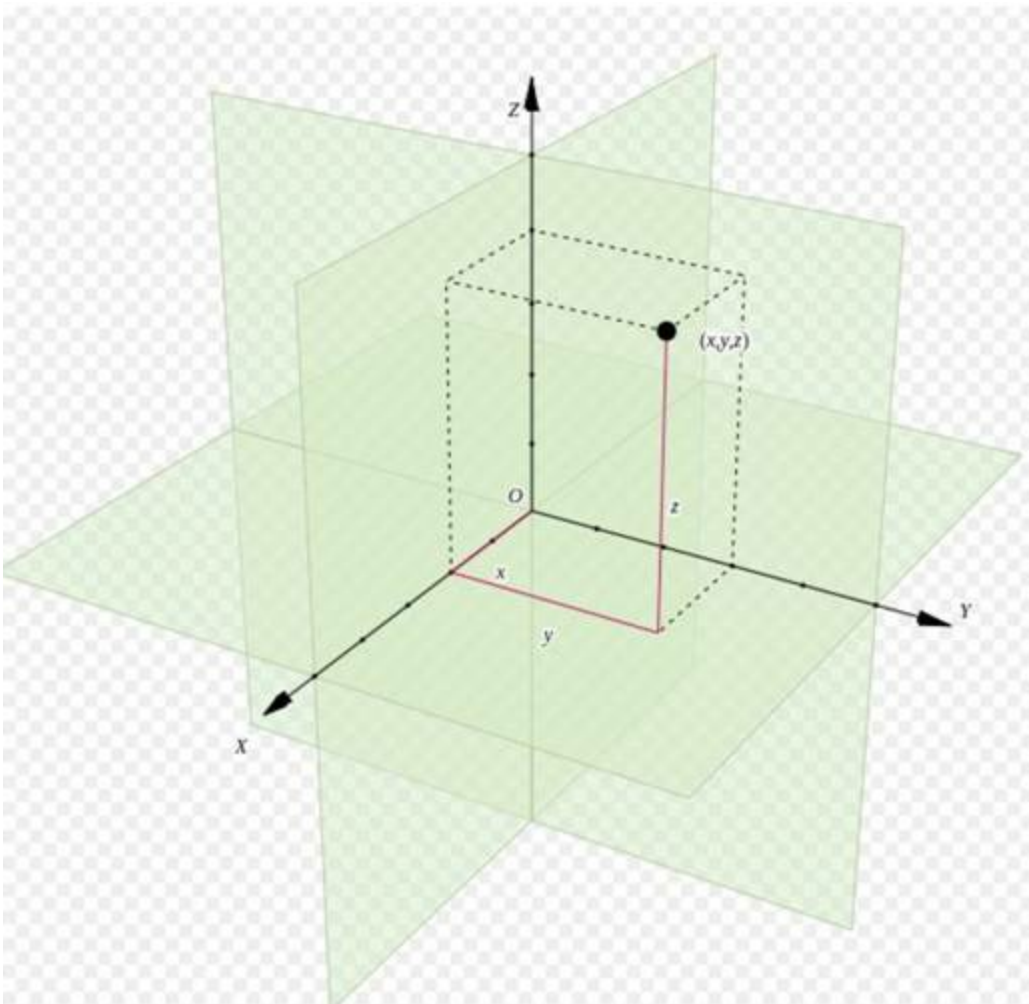

Figure 4 (courtesy of Jorge Stolfii)

Here is what Wikipedia says about the Cartesian system:

"A Cartesian coordinate system is a coordinate system that specifies each point uniquely in a plane by a pair of numerical coordinates, which are the signed distances to the point from two fixed perpendicular directed lines." Now, I'm not sure about you, but

reading this makes my eyes dry. All I know is that the above makes some great plastic shapes. In other words, you don't need to know the science to enjoy the outcome of this hobby.

Cartesian 3D printers typically have a print bed that moves along one axis. The extruder sits on the other two axis points where it can move in four directions, as seen in Figure 5.

Figure 5

If you roll all this clever stuff up into a box, and tape it shut, then open it, you can make one of these. (Figure 5) This is typically a "desktop 3D printer." It's not too large, and you can just about get it to sit on your desktop.

Delta 3D printer

Another style that's growing in popularity is the Delta 3D printer.

Delta 3D printers also work within the Cartesian plane. But as you can see when you look at the "**BIQU Kossel plus**" (Figure 6) (a fine beast, I think you'll agree), there's no chance they'd be mistaken for anything like the one above.

These printers typically stand taller than their desktop cousins.

The main difference is that they typically have a circular print bed. The extruder is suspended above the print bed by three arms, in a triangular configuration, thus the name "Delta."

Delta 3D printers were designed for speed, but they also have the distinction of a print bed that never moves. The available build height is another difference you will see on these types of printers.

Figure 6

Because the print head is suspended above the work plain, it can go much higher than its desktop counterpart. It is also said that this type of printer is not as detailed as the desktop version. While this can be true to some extent, playing with the settings, and getting them just right, does improve the functionality of this type of printer. I go into this in more

depth in another of my books on calibrating a Delta style printer.

Stereolithography (SLA) Printer

SLA printers may not be as common as FDM printers, but they are worth a mention because of the inroads they are making in the consumer market. If you were to want one, already made, you would probably not see much change from a £2500, for a decent one. Formlabs Form 2 is available should you wish to try one of these printers. Be careful as the resins for these types of machines come in at a hefty £120 for 500ml. This isn't to say they're not worth it. As with most things today, it's the user base that helps to make them more affordable. It's those fearless individuals who see something they want, and without waiting for some other company to refine it and start selling it, they take matters in to their own hands and make one themselves. This is what the RepRap community did with the FDM printer.

SLA printers have one thing over their FDM counterparts: the quality of the printed object.

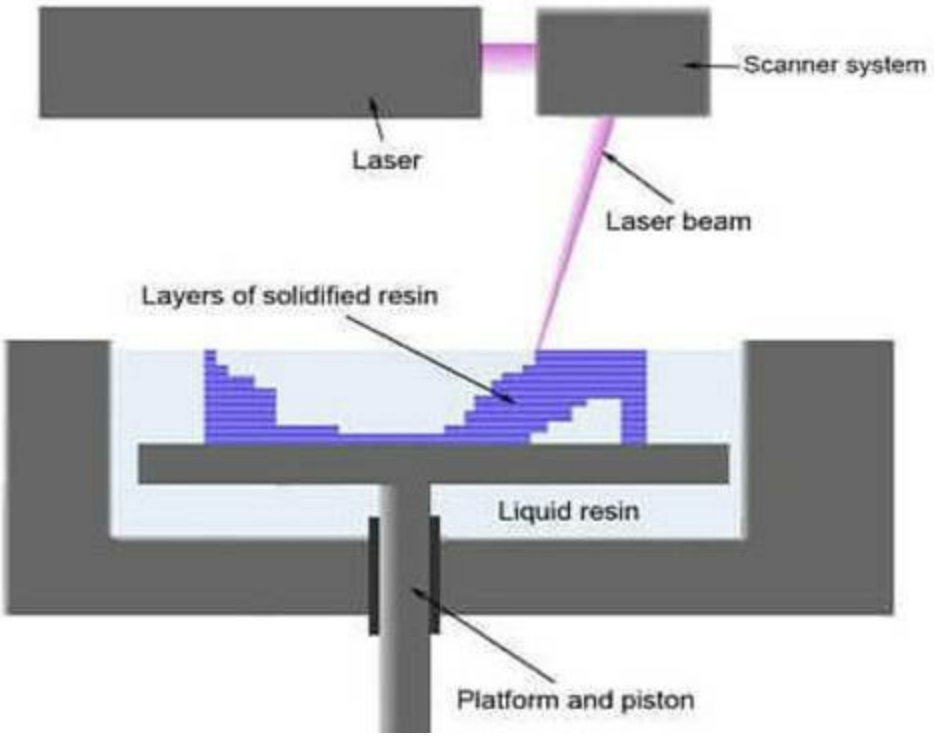

Figure 7

With FDM printing, and as you now know yourself, the object is made up of lots of layers. These layers leave a slightly ribbed affect in the walls of the finished object. With SLA printers, this is much less of a problem because of how SLA printers do their thing, as explained next.

SLA works by exposing a layer of photosensitive resin to a UV-laser beam. Once the laser has swept over a layer of resin in the desired pattern, that resin hardens and becomes solid (Figure7). Then the model-building platform, in the liquid tank of the printer, steps down the thickness of a single layer. The laser begins this process once again to form the next layer. Each layer is built on top of the preceding one. This is what creates a more finished look, although this does come at a price. Expect to see the price come down significantly in the next few years. As patents expire, these will be available to the public, and we all know what happens then.

By the way, if you decide SLA is the way for you to go, and you want to build one yourself, head over to www.buildyourownsla.com and start building your own. All you need to get started is a Arduino Uno Microcontroller, a stepper driver, a DVD drive laser rail and a glass vat. This is all available for about £25. Ingenious, right?

Digital Light Processing (DLP)

DLP uses a digital projector screen to project a single image of each individual layer across the entire build platform. Because the projector is a digital screen, the image of each layer is composed of square pixels, resulting in a layer formed from small rectangular blocks, also known as voxels. Both SLA and DLP printers share some characteristics in that they both use a type of light to cure a resin. But, because DLP printers need to lug a projector around to make them work. DLP tends to be bigger than its SLA breathing cousin. The other difference is that SLA uses a laser beam, thus the shape of parts is more curved or rounded. DLP uses a digital light source, and being digital the image of each layer in more square in its appearance.

At the time of writing this book, I noticed that the "Wanhao Duplicator 7 DLP" was available for around £420 or $556 in old money. You might like this type of printer if you are interested in small scale work, like jewellery mock-ups or other small components. Like SLA the resins will have you selling your first born, keep this in mind when looking at overall cost. Also, a work of warning. These resins are messy, and quite bad for you if you cover yourself in them if you know what I mean. But as time goes on, these types of printer will clean up their game and in a couple of years, these will become a viable proposition

Figure 8

What have we learned:

- FDM 3D printing is cheaper and more abundant that any other type of 3D printing.
- There are two main types of FDM printers: desktop Cartesian and Delta.
- There are lots of different filaments from PVA to ABS and many other exotic types in between.
- SLA printers print very fine detail and give a better finish, but you'll have to sell a kidney to afford a decent one.

- DLP printers are much like SLA but uses a digital projector as a light source.

Different Types of Filament Pt2

The reasons you may want different filament types are many and varied. I will explain why you might want to change from one type to another and I will list some of the more widely-known filament types that are coming to the forefront in this field. This will give you a good starting point when choosing which one to use, depending on what your particular printing requirements are. It used to be that there were only a couple of filaments you could print with, but over the past year or two, this has changed. Factor into this, the manufacturing process, which allows these exotic filaments to be produced and with tolerances that allow many printers without special hardware to be able to use them. It is little wonder that more and more people are giving these new filaments a go.

Most kits and retail 3D printers now come with a heated build plate, otherwise known as a heated bed. This opens up many more possibilities when it comes to choosing filament types.

I personally use Rigid Ink https://rigid.ink/ and Hatch Box http://hatchbox3d.com/ . This is because I want a filament to work, not create blockages. The filament from these two companies looks nice once it's printed. These two brands have the nicest-looking finished prints. The colours are vivid and the final cherry on the cake is the customer service. If you ask a question, you'll get an answer—a helpful one too. That's why I go to these two brands if I have something I want to look nice. I have noticed, over the last few months, that many of the lesser types, even some manufacturers of filament that I have not heard of, have been getting very good results. One worthy of mention here is Real filament. I was looking for some PETG the other day, and a 1kg spool of Real filament was well priced, so I took a chance and ordered some. To my surprise, it was great. I think filament is getting better in many ways. The days of having to pay more for really good filament are gone because of the steps filament manufacturers and taking in making their products better and better.

Chances are, when you brought your kit, you were also given a reel of filament to try. While this is a great way to try out your printer straight away, it's generally not great quality filament. There will come a day when you need a specific object to be made with a different type of filament.

It might be that something doesn't warp with heat like PLA. Try putting a PLA-made object in your car on a hot sunny day; it doesn't last long. This is where ABS comes into its own. While it does require a higher hot end temperature, it can withstand higher temperatures during day-to-day use. What you need to do is figure out what it is you want to make, and where this will be used when it's printed. This will give you a good idea of the type of filament required.

Let's look at some of the various filaments that are available. I will list their machine temperatures and bed temperatures and tell you why you might want to use them. While this won't be exhaustive, it will give you useful insight in to the different varieties. I only have about 5 different sorts in my filament store, and I get by just fine. If I need anything outside of this, I buy what I need as a one-off. There seems to be more half KG-sized reels about these days, so it's pretty easy to buy an exotic type for a one-off project.

PLA – Printing Temp 190C – 210C Bed Temp – 40C – 60C

Poly or polylactic acid or polylactide is a biodegradable and bioactive thermoplastic aliphatic polyester derived from renewable resources, such as corn starch, cassava roots, chips or starch, or sugarcane. Be careful though, because it sucks up water like a straw. Keep it covered up when not in use. The filament can be used for most things; it has a reasonable strength and can be used for load bearing, all be it, light loads. This is probably the most widely used filament and it comes in lots of nice vivid colours. The other thing about PLA is it doesn't smell when you use it. Some filaments give off a nasty whiff when you use them, but not PLA. With PLA, you definitely get what you pay for.

What it is good for
General purpose filament is good for just about anything you want to try printing. It's quite cheap. You will be able to print your own body weight with the number of objects you can get with a KG of this bad boy.

ABS – Printing Temp 230C – 250C Bed Temp – 80C – 120C
ABS is probably not far behind PLA in terms of use by the 3D printing community. It is harder than PLA and can withstand some serious bashing without a mark. Lego is made from ABS, and we all know how hard that stuff is, especially if you've ever stood on a piece in the dead of night. ABS has better heat-restraining properties, and it does not warp like PLA even in a hot environment. It does take a little more care when printing though. You must have a heated bed, but be careful of a cold draft, or you will pay the price with parts warping. This is one that smells, so don't print a lot of this stuff in an enclosed room.

What it is good for
Anything that requires some extra strength and some heat resistance.

Nylon – Printing Temp 255C – 275C Bed Temp – 130C plus
The nylon family of polymers is widely used across the world's industries for applications where a high degree of strength and toughness is required. Nylon also deals with high temperatures very well. Many of the nylons on the market are manufactured using a type of nylon, like nylon 6 or nylon 6/6. These nylons are easy to process and are very strong, but they can lack stiffness. There is a nylon that's made from nylon 12; it retains the excellent features you would expect from nylons, such as strength, layer adhesion, and good bridging properties. This nylon is more rigid, more resistant to higher temperatures, and more chemical resistant. It's a good all-round egg, as they say.

This nylon does require a heated bed to print properly, as well as higher nozzle temperatures. You must keep this dry. If you dare print this filament after letting it absorb any moisture in anyway, expect problems with bubbles in the finished object.

What it is good for
Parts that will be used in higher temperature locations that require strength and very good bridging properties. Not really affected by chemicals.

What it is bad for
Stockings; it's not that type of nylon, so be warned.

Wood-type filaments – Printing Temp 190C – 230C Bed Temp – 50C
Yes, you can get wood-effect filaments. In fact, you can get wood filament with wood as part of the ingredients. It looks like wood and it smells like wood. You can even "stain" it, and you can use "wood putty" to fill it and make it smooth.

What it is good for
Wood filament that contains wood and smells like wood? You really need to ask?

PETG - Printing Temp 225C - 245°C Bed Temp 70C – 80C
Polyethylene terephthalate (PET) is the most commonly used plastic in the world. You can find the polymer almost everywhere you look, from your water bottle to clothing fibres, laying on the beach, in sea turtles stomachs, even in food containers. PETG can be combined with glass fibres to create engineering plastics. Basically, thousands of consumer products, foods, and beverages are delivered and packaged within this material. Now you can use it to create even more stuff, with the added advantage of a really smooth finish. We're talking birthday presents here.

There is a filament called PET; it is slightly inferior to PETG. PET can be over heated, and when this happens, it can become brittle. PETG is considered to be food-safe. Better check on that when you go to buy it, as not all manufacturers will state this.

What it is good for
Safe for food items; finally, you can make items for the kitchen.

NinjaFlex - Printing Temp 210C - 225°C Bed Temp 40C – 50C
NinjaFlex is a cutting-edge filament for 3D printers. It is a specially formulated thermoplastic elastomer (TPE) that produces flexible prints

with elastic properties. Finally, a flexible filament. Think of the possibilities: flip flops, phone cases, etc. With excellent build platform adhesion and bonding between layers, this is the bridge between printing objects and looking at it and thinking, “I wish this was flexible.”

What it is good for

This is a fun filament that can be put to so much good use. The only limit is your imagination. You can print watch straps, phone cases, footwear, wheels and tyres. The possibilities are endless.

And the rest

Here are some other filaments I haven't mentioned above. As a beginner, you probably won't have a need to use them. But in time, you might, so keep an eye out for these.

Metal

Yes, metal. You heard it here. Maybe you're looking for a certain look in your prints, something a little different and shinier. Well, fear not! You can use metal filament. Metal filament isn't all metal. It's a mix of metal powder and PLA or ABS. But the results are amazing, and they have the look and feel of metal, with the added weight too. Bronze, brass, copper, aluminium, and stainless steel are just a few of the varieties of metal 3D printer filament. As a bonus to using this type of filament, you can make it look old by weathering it, making it look rusty and even polishing it.

Conductive

You can now get conductive filaments. This allows projects with a low voltage current to pass through them. This addition will keep the electrical and computer engineers amongst us happy for months. Used with PLA and ABS filaments.

Glow-in-the-dark

Does what it says on the reel: it glows in the dark. Halloween will never be the same again.

Filaments that change colour

Think back to those days when you used to be able to buy those t-shirts that changed colour. Well, now you can get filament that changes colour dependant on heat. They will tend to change between two colours, like purple to pink, blue to green, or yellow to green.

Magnetic

To be fair, this is a little like the metal filaments I mentioned above. Although this time, it's mixed with a certain amount of iron, making it stick to magnets, but it doesn't mean it's a magnet itself.

Buying a 3D printer

This is the start of the good bit: the beginning of your new hobby. You have read about the history of 3D printing and the several distinct types of 3D printers that are available. Finally, you have decided to take the plunge. But where do you go to purchase your new 3D printer?

There are a few ways to buy a 3D printer. I will take you through them, then you can make up your own mind. If you want a choice, you need to look somewhere like AliExpress.com. I know what you're thinking, but as I have bought three so far and had dealings with the manufacturers in China for my Delta printer, I must say, they are more than happy to go the extra mile to make buying one from them as painless as possible.

There are a few things you can do if you would rather not go direct to China. You can go through Amazon, which will give you a good guarantee to getting what you order. But all in all, I felt really looked after by the people I dealt with whilst shopping for my last printer. I really wanted a Delta style printer and after looking around, I saw the one I really wanted on Amazon. Trouble was, there were no reviews. So, I looked on AliExpress, and there were a few reviews there, which all said how great it was.

At the end of the day, you need to do your own research. Do things that give you some peace of mind. Pay for the parts using your credit card, because that way, you have their guarantee, and you won't have to foot the bill if something goes wrong. I am not trying to say anything will go wrong, and I certainly don't think they would purposefully scam you out of your hard-earned money, but there are a lot of miles and many depots, warehouses and drop-off points. These might hold your purchase up longer than you had anticipated.

Things to think about

Before I let you loose with your credit card, there are some things that you should look out for first. Not because they are bad, but because

whatever you decide to buy, you really want it to serve you well.

- Get a printer with a heated build bed.
- Make sure your printer is made from aluminium and not from acrylic.
- Can your printer use different filament?
- Get a heated bed.
- Get a printer with a good build volume.
- Try to get a printer with an auto-levelling bed function. You don't have to use it, but it's nice to have.
- When deciding on your printer, check out the user forums. They are the best place to find out if it stinks!

We'll go through this quickly, giving you all the information you need to make the best purchasing decisions.

Get a printer with a heated bed

This is about the main area of your 3D printer. This is where things are born. This is the starting point for every idea you end up having. A heated build bed will help you in a couple of important ways. It will also determine what types of filament you can use. Having a heated bed will basically help your projects stick and not move while they are taking shape. What usually happens is that the heated plastic extrusion is placed directly onto the build bed. Those first few layers really need a good place to adhere to. It is not impossible to make heated plastic stick to the build plate if it's not heated, but having a heated one does make it easier. The other reason you might want to have a heated build plate is because, if you are thinking about using other varieties of filament, like ABS for instance, a heated build plate is essential for making the whole job less fraught with problems. There will always be people who say, "I don't use a heated bed," and that is fine, but believe me when I say, it will make it easier in the long run.

Make sure your printer is made from aluminium and not from acrylic or wood

Some printer manufactures try to keep the cost down by using cheaper materials. One of the ways to cut cost is to use different materials for the

main body. Obviously, aluminium is more expensive than wood or acrylic, but it is stronger. The main frame, and the main gantry, need to be metal. This is because there is quite a bit of weight being thrown around as the printer moves the extruder left and right, and up and down. This produces inertia, and this can produce a lot of force on certain parts, causing warping. Look for a printer with a metal main body as this will last you longer.

Another thing to look out for, is that the nuts and bolts used during the build process are tightened at regular intervals. As stated above, there are forces at work during the printing process. Keeping everything nice and tight will help to get better prints. If you notice a particular set of bolts becoming loose more than others, consider a spot of thread lock glue; that should do the trick.

Can your printer use different filament?

Some printers are advertised as only being able to print one type of filament, usually PLA. While this might seem okay, I can guarantee, you will eventually want to print with other sorts of plastic. PLA is great for many things, but having the ability to print ABS (harder and more durable) and other filaments will be a plus, as your knowledge of 3D printing increases.

Get a heated bed (again)

I thought we already covered this in this chapter, I hear you cry! Well we have, but it's really important, so I am telling you again. And this option goes hand in hand with the one above. To print ABS and other types of harder, more durable plastic, a heated bed is a must! Having the ability to heat this part of the printer really does help make what you are printing stick and not lose adhesion. There is nothing worse than getting nearly all the way through a five or six-hour print job, only to see it moving around. So, do yourself a favour and get a heated bed.

Get a printer with enough build volume

Like we have already discovered, the two main types of printers that we are mainly interested in (Prusa and Delta) can only print an object dependant of the printer's theoretical build volume. Basically, how high can it gotimes how wide and long. Imagine you need to print a part that

is 170 x 200 x 120; if your build volume is only half this, you are not going to accomplish this easily. Try to think ahead. What sort of things are you interested in making? Answering questions like this, will guide you to finding the right size at the initial purchasing stage.

Try to get a printer with an auto-levelling bed function

This is far from a deal breaker, but it does make calibration easier. Calibrating the build bed is something that is a must. If you want really good prints, a level bed is going to help you get those superior results. As I said before, this isn't a deal breaker; it is more of a "nice to have." Manually levelling a printer bed isn't a hardship; in fact, I am a great advocate for doing it by hand. But if it's auto-levelling enabled, you can run it before every print job. That way you will know you have the best possible start to getting a great finished product. The other reason I say to get auto-levelling is because you are what might be class as a "noob."You want to be gently lowered into this art/science, not slapped around the face and scared witless. When you've had the printer a little while and learnt a bit more about it, then you can try levelling the bed yourself.

If in doubt, give the forums a shout

A forum is a place where people go to talk about a particular subject. 3D printing is a subject that has spawned a lot of interest. With interest comes questions, and questions require answers. Basically, there are user groups that talk about certain types of 3D printers. Let's take on a particular printer: let's talk about the Prusa i3. This is the defacto printer type that most people would like to have. This model of printer has been copied more than any other. It was all started by a guy named Josef Průša. His research and development really kick-started the 3D printer, home standard. As you can tell, there are plenty of forums wanting to talk about this type of printer. There are questions about the best way to set one up, to questions about problems whilst printing. You will also find people there talking about upgrades, questions about different filaments options, and many other subjects under the heading of the Prusa i3. There are also many other forums with diverse types and makes, and the users would love to give you all the advice you may need.

So, whatever you are interested in, a forum is definitely the best place to get started with asking questions and getting good answers.

Finding your ideal printer

In this section, we will explore the different options for finding and buying your first printer.

There are a couple of options that are available to you, should you wish to buy a 3D printer. These are as follows:

Buy one ready-made, like the XYZda Vinci MiniMaker(Figure 9) with a build volume of around 5.9'' x 5.9'' x 5.9.'' That's 149mm in new money. This is a ready-to-go printer with minimal setup. No building, no messing about, and excellent quality prints. If this printer lacks anything, it is a little small on the build size, but apart from that, it's a solid little purchase. The price of this is around £205 or $250 for our American friends.

The other thing you need to know is that you can only use XYZ filament. It uses a special chip on the spool that won't let you use anything else. This can be worked around, if you so desire, but even with this shortcoming, I do feel that should you want a printer that is ready-to-go, this one is good.

Figure 9

If you want something a little bigger that is already made and ready to go, will cost you considerably
more.

That's not to say you shouldn't get one; you should. If you want a 3D printer that's ready to go and requires hardly any setup, you should think about one that's almost ready to use straight out of the box. The one above is ideal if you are wanting to find out if 3D printing is something that might float your boat.

There are plenty more great printers that can be bought for a price, like FlashForge, Maker Bot, and Ultimaker. The only thing you should consider is, will you use it? Will that £2000 printer get used and make the purchase of it worthwhile? If not, then spending £300 on one that you put together yourself is a lot less waste and less money to shell out in

the first instance.

The key issues with this way of doing it, is that you are missing out on an enjoyable part of the entire process: making it and understanding what parts go where, and how the belts work the different axis, and so on. This is all part of the understanding you'll get when making one from a kit. I'm not saying don't get a ready to use one; I'm just saying think about it. See what you get from the advice found here, in this book, and then make your mind up. You never know, I could save you loads of money and get you to learn something new and helpful in the process.

Let's buy a printer

In this internet-of-things lifestyle we now live in, we are used to wanting something and ordering it straight away. It arrives, and we can use it as soon as it's out of the box. 3D printing needs a little bit more time and effort. You might think that it's easier to buy one by going to a shop, bringing it home, and plugging it in, thinking you will be up and running in no time. The other way you could do this is to order it in kit form, then when it gets delivered, you can have the enjoyment of building it. Building one of these printers is not difficult. It takes a little time, but when it is built, you will have a deep sense of achievement.

As I said, you don't need to be an engineer or have a degree in science to put one of these together. All you need is an enquiring mind to want to know how it all works. Then, as you progress into designing your first part and seeing it print, you will know that it was all because of your hard work.

Ok I want one, where's my credit card?

Right fine, but hang on a second. By all means, get on the web and get ordering. But first, let's go over the right way to do it. You need a safe way to order something from China that you haven't seen except in a picture on a web page.

I will tell you about the following ways I have ordered my printers. First of all, look on AliExpress. You can find them here, https://www.aliexpress.com/ . When you have the page loaded, in the

search bar, near the top of the page, type in “3D printers.” Then, when that page loads, look on the left, as you can see in the picture below (Figure 10) highlighted in red. If you want to narrow the search a little more, click “3D Printers.” This will allow the web page to show you more of the selection of 3D printers.

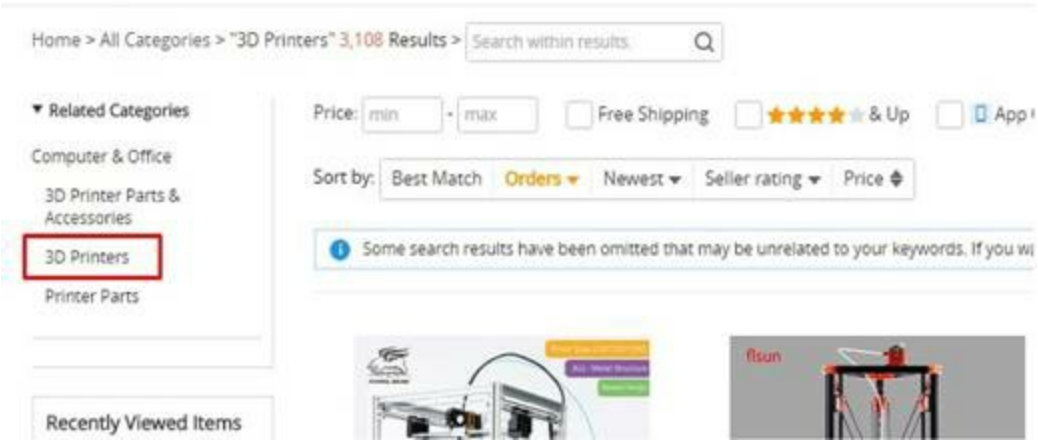

Figure 10

Now, you will have a more focused 3D printer-only view of what they offer. Decide how much you are willing to pay for your printer. Don’t go overboard: spend only what you can afford, perhaps 230 to 300 for your particular coinage. Just get a taste of what’s available. Select the OK button, as seen below (Figure 11).

Figure 11

This will re-order the list into what is available for that price point. Another little trick you can use to make it a little better shopping experience is to look to the right and you will see an option to “Ship From.” (Figure 12)This is handy because some of these companies have stock in other countries, namely in the EU.

This can be handy because if you were to select a printer, and it can be shipped from Germany, you won’t pay any import duty. Click to see if

there are any printers you fancy that are in an EU country, or near where ever you currently are. It's so much better if you can buy a good printer and have it shipped from near you. Not only is it cheaper, but it will get to you sooner as well.

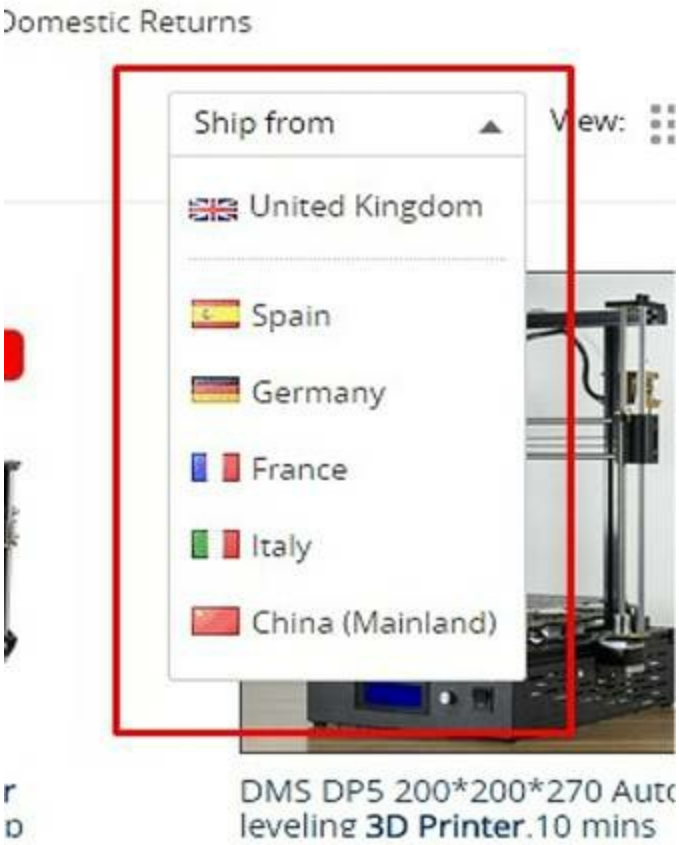

Figure 12

I tried this as I was writing this book, and I must say that the only place that reported having printers was Germany. There were eight printers listed. This tends to change all the time, so do your homework. Above all, don't rush into it. I took a month to look and read up on the different sorts of printers before I decided to buy the one I liked.

For illustration purposes, we will look at the first one on the list. Click on the printer to be taken to the product description. It's a metal RepRap Prusa i3, just like we were talking about earlier (Figure 13).

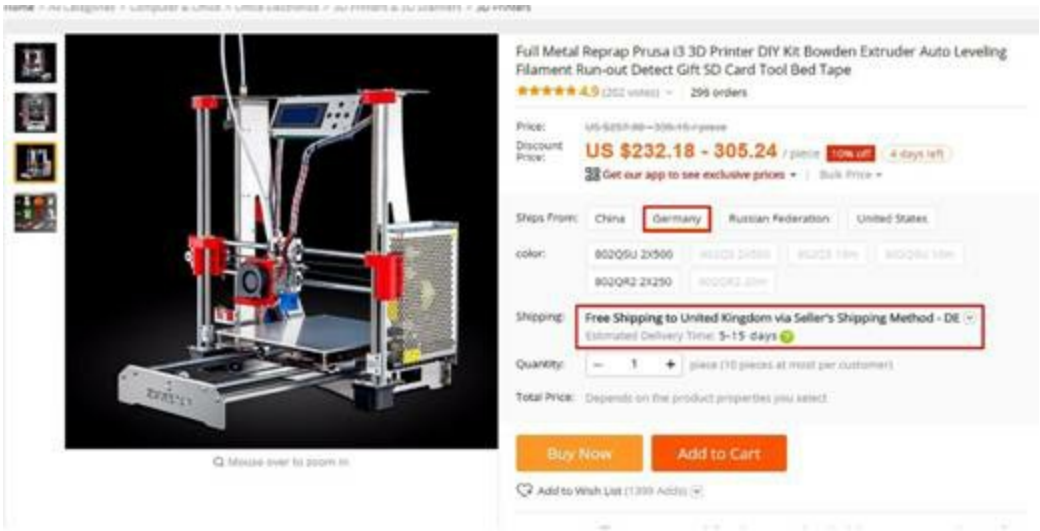

Figure 13

As you can see highlighted in red (Figure 13), this will be sent from Germany. It does say 5 to 15 days, but I think this is an arbitrary number, and just covering their bottoms in case of delays with the courier. I ordered my last printer from China, and it only took five days, and two of those days were the weekend. So now, let's look more closely at the product description.

Here you can read a little about the dimensions and build capacity (Figure 14). There is also a video detailing the printer's attributes. I have highlighted the next part that you need to look at. This product has gotten a lot of people leaving feedback.

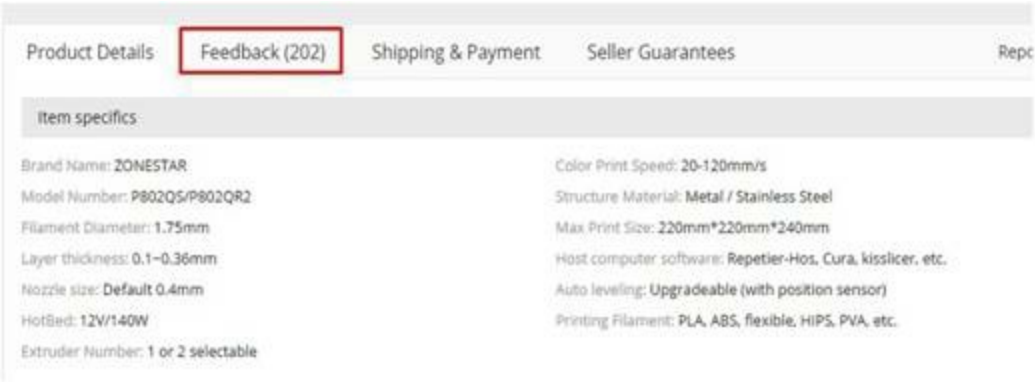

Figure 14

This is a clever way of seeing if it's any good, and what the people who bought it think of it. Spend some time looking at what they say, and make

sure it's a good buy. People may tell you the reviews are all rigged and that the company who makes it, pays people to leave good comments. That might be true, but I guarantee that 200 people have not been paid to leave a comment (Figure 15). This isn't a 100% guarantee that what you are about to buy is perfection, but it goes a little way in helping to chop out the rubbish. There are also other tests that we will use to find its true worth.

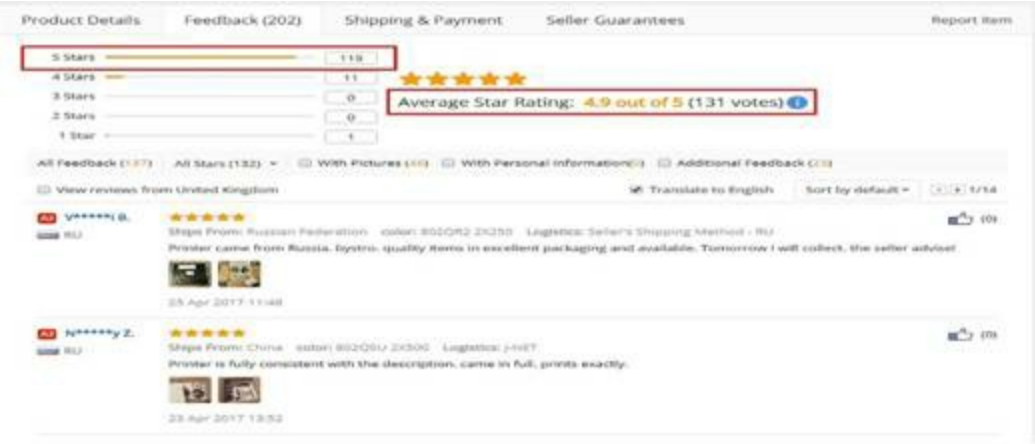

Figure 15

Ok, we have some information on a product that we like. We have checked the stats and we like what we see. We can get it from Germany. That's the import duty taken care of. It has good user reviews, so we're good to go, yes? Hang on. The next thing we can do is take the make and model, and the company who makes it, and do a Google search. This will focus the search and allow you to see what other people think outside of the Aliexpress website.

If we Google "Zonestar Prusa i3 review," (Figure 16) we can see a YouTube video review, which is a great start. Doing checks on items you have an interest in helps underline and validate that it will be an enjoyable experience if you decide to buy one.

Of course, I am not going to guarantee that if you follow my instructions, everything is going to be fine. Stuff sometimes happens; that's why you make sure you order with a credit card. That way, if something does go wrong, you won't foot the bill. Take your time, do your homework and above all, if you think it's too good to be true, it usually is. (Except this

book…it really is this good, and at this price, it's a steal.)

There is one more check you can do. Look at the bottom on the below screen shot I took. You can see there is an Amazon review. Look out for this, because it can be very helpful to see the printer listed on Amazon.

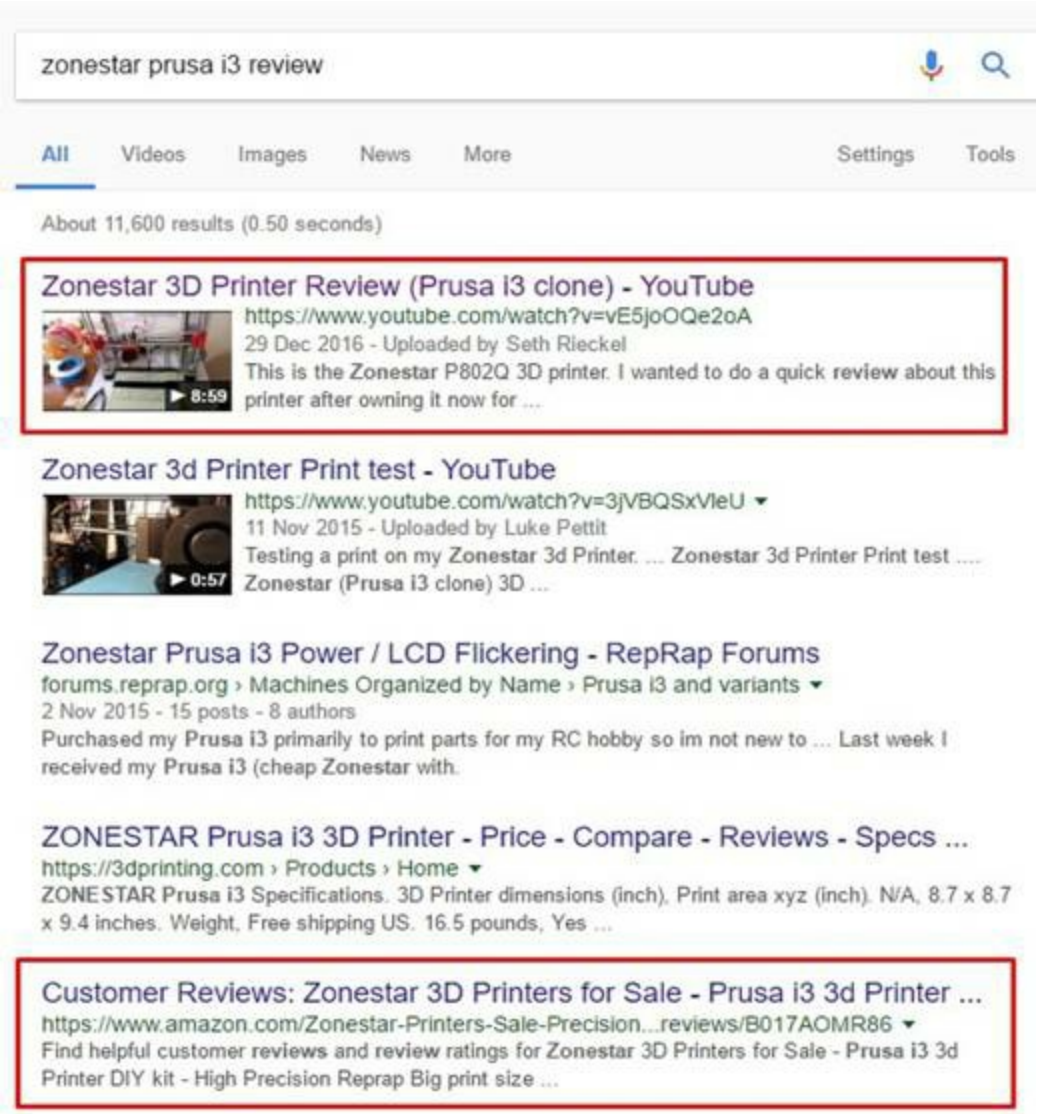

Figure 16

If you can order your printer from Amazon, that gives it a huge thumbs-up in terms of customer satisfaction. Amazon prides itself on customer satisfaction. To see your beloved printer available on Amazon is going to give you peace of mind as to its quality.

Reviews

We all love a review, especially if it's a good one that is on something we want to purchase. Amazon prides itself on its user reviews. They are the cornerstone of the Amazon empire, and why it is as big as it is today. It's time to tell you about my pet peeve! It is people who leavea bad review because of a "problem" with the product, when the real problem is the reviewer doesn't know how to use the product properly. I say this because if you find the ideal printer and it only has a handful of reviews, don't be put off by the odd one complaining that it doesn't print very well. Chances are, they just need to use the printer a bit more. Or, it's their first time with a 3D printer, and they need to learn their craft by spending more time with it. Look at the reviews, then take an average, and mark that product on the average. That's all, and I'll shut up now.

Finally

I bought my last printer on Amazon from a company in China called BIQU. For the printer I wanted, there was not one single review, but I really wanted it. Because I knew Amazon was looking after me, I decided to go with my heart, and I ordered it. I could not have had a better experience. I was kept up to date via emails. I asked some questions, which got answered straight away. The shipping time was said to be two weeks to a month. I ordered it on a Friday morning, and I had it on the following Wednesday morning before 11am! That is great service, and it was well packed. Because of the great name that Amazon has, I ordered my printer. Even though there may be no reviews, don't let that put you off if the rest of the ducks line up.

Ok, I'm happy, can I buy one now?

If you have done all the necessary checks. You have done a search on what other people think about the printer you are considering buying, and are happy with what they are saying. Then it's time to buy your printer.

Use a credit card to do the final ordering. This will give you more cover should things go wrong. I am not saying in any way that there is a chance that you will get ripped off. I honestly believe that buying a 3D printer from China is no different from buying one from Amazon. But, there is a

longer route that must be taken to get it to your door. That means others are responsible for your package as it wings its way to you.

It's Arrived

Great, I'm happy for you. Now, before you go mad and start building it, you need to do some checking of the parts that are in your box. There are a lot of parts that go to make up the average printer. These are carefully put together at the factory. But, things go wrong sometimes. Bit's get missed from the packing sheet, or someone has just started working there. Anyway, you should find the parts list that will be included in the box that you see before you. Get the parts list and double check that everything is there as stated on the parts list. There is nothing worse than nearly finishing your build and realising that you are one "stepper motor" missing, or something like that. If you check it now and find parts missing you can send a quick email, detailing the missing parts and they will be on their way to you. It means you can start the build knowing you're not going to have to wait too long to get them.

While I was building one of my printers, I found that I was missing some screws and belts. I informed the manufacturers and they sent me an Amazon code to get the parts, from Amazon and they were with me the next day. I didn't have to pay a penny and they were sent out via prime delivery. But these kits are getting better every week, missing parts are few and far between these days.

Once you have checked it and found everything to your liking, you can start building. The build sheet will take you through the whole build process and it's usually pretty good. Just remember that it is a translation from Chinese to English. There will be mistakes, take your time and if needs be, read it a couple of times so that you understand what it's trying to tell you.

Don't rush this process, take your time, while it's not hard it does require a little time and effort. When you are done, double check the plans, to make sure yours looks like the one in the picture. Double check the wiring and make sure everything is nice and tight.

If you have built your 3D printer, give yourself a massive pat on the back. You have done a grand job and learnt a big lesson on how this amazing hobby works and what it takes to produce objects from hot plastic. Look for my other books in this series if you need help calibrating your printer, listed at the end of this book.

Links and Resources

Here are some links mainly web related to help you in your journey. I have tried to list the ones that helped me.

Prontaface URL: http://www.pronterface.com/

First and foremost, I used this tool more than anything else. Not sure if it's still updated but a great tool all the same.

Cura URL: https://ultimaker.com/en/products/ultimaker-cura

I like this program, we all have our own opinion, it just so happens mine is the best. Seriously though, you are free to use what you like, I just find version 15.04 and the latest Cura does what it says it will do. Yes, there are other slicers out there….ok I'll shut up.

Tinkercad 3D CAD software URL: https://www.tinkercad.com/

Great and free, with a nice little tutorial to get you started. Although I use other software if you want something quick and easy fire up your browser and head over to Tinkercad.

Fusion-360 URL: https://www.autodesk.com/products/fusion-360/overview

When you've cut your teeth, and think you need something with a little more bang. Try Fusion-360 a powerhouse and best of all it's free if you are a personal user or in education.

RepRap forums URL: http://forums.reprap.org/

The place to go should you have any questions about anything to do with 3D printing. Just don't ask what printer you should buy.

Marlin Firmware URL: http://marlinfw.org/

So, they say, God created heaven and earth in six days. On the seventh day he rested and decided to upgrade his firmware, where did he go?

This is your centre of the universe when it comes to all things Marlin.

Podcasts you should follow

I spend around three house a day driving to work. I started looking at "Podcasts" as a way to alleviate the boredom and finding some 3D printer related podcasts helped. So, I thought I would add the ones that I feel have the content to help you in your own discovery of 3D printing. I use "CastBox" but you may have your own that you use.

3D Printing Today
https://www.facebook.com/3DPrintingToday/

Two blokes (Andy Cohen & Whitney Potter) taking about all things 3D printing related. Industrial, hobby, professional. Start by sourcing their earlier work, they explain stuff really well and cover hardware, different types of filament. Software including CAD related applications.

WTFFF?!
https://3dstartpoint.com/wtfff-podcast/

This actually stands for "What the Fused Filament Fabrication" Tom and Tracy Hazzard are a Husband and Wife team with an emphasis on design. What makes them worthy of a listen is not only their ideas on the 3D printing market. Brought about by their success in designing and selling what they design. They also interview people who have been working in the 3D printing industry in one way or another. Great insight for whats coming in the future of 3D printing.

The Fargo 3D Printing Show
http://fargo3dprinting.podbean.com/

This is a nice little show that gives you the information of 3D printing. Although, it's a bit hit and miss when you might see a new show but all the same it's interesting chat when they do a new one. Definitely worth you finding them and their past podcasts and keeping them close at hand.

Handy "YouTube" links

3D Printing Nerd URL:
https://www.youtube.com/channel/UC_7aK9PpYTqt08ERh1MewlQ

Don't believe everything you see on YouTube, but you can trust this guy. He seems to tell it how it is, and he is entertaining as well. Well worth a look. Careful though, you can lose hours going through all the reviews he does, very entertaining.

Makers Muse URL: https://www.youtube.com/user/TheMakersMuse

Again, content that you will learn from and reviews you can trust, give it a look.

Thomas Sanladerer URL:
https://www.youtube.com/channel/UCb8Rde3uRL1ohROUVg46h1A

A mine of information this one. Lots of really good reviews and how too's. Tells it how it is and easy to watch.

Last but definitely not least, my website URL: https://totalwasteofplastic.com/

Should you wish to contact me, email me at this address where I will try to answer your questions. Alternatively, look for me on Twitter, Instagram or Pinterest. Don't be a stranger ;O)

- twofplastic@gmail.com
- Twitter - @twofplastic
- Instagram – totalwasteofplastic
- Pinterest – www.pinterest.com/twofplastic

Also in this series

- Don't Be a Total Waster (Of Plastic) Calibrate Your Desktop 3D Printer Like A Boss Book 2
- Don't Be a Total Waster (Of Plastic)Calibrate Your Delta 3D Printer Like A Boss Book 3